SYCON-66XX E3

Automatic power factor controller

SYCON

Certain electricals loads such as motors found in heavy machineries, can cause the electrical system to be highly inductive. This result in poor power factor. Poor power factor means higher energy losses which ultimately get converted into large electricity charges. A simple solution to this problem is to balance this inductive load with equivalent capacitive load . This is achieved by connecting or disconnecting the capacitors to or from the system. Manual switching of these capacitors is not possible in case of rapidly fluctuating loads . So even in an environment of rapidly fluctuating loads to achieve the required power factor one may need an automatic power factor control device, called automatic power factor controller, to connect and disconnect these capacitors. Sycon 66 XX E3 controller is an automatic power factor controller used to control the power factor of the system. It can sense the power factor of each individual phase in the three phase

Display

16 x 2 Large alphanumeric LCD Display.
Capacitor ON/OFF status indication on LCD

Display Parameters

Phase to neutral voltages and currents.
Power factor of each phase.
Active Power (KW), Apparent Power (KVA), Reactive Power (KVAR)
Shortfall KVAR display with sign.
Required Test Modes for Panel Testing.

General Features

- Friendly user interface.
- Easy to install.
- Complete menu guided programming operation and display
- Best fit capacitor switching
- Automatic / Manual operation
- Test mode for Panel Testing
- Available in 6,8,10,12,16 stages
- No of stages can be configured at site
- Automatic / Manual capacitor value feed
- Password protected settings.

Control Features

- Password protection for settings.
- Site adjustable CT Primary.
- Adjustable value of Target PF
- Switching Delay
- Lock out time for power on
- Capacitor disconnection in case of Low Current
- Auto identification or manual feeding of capacitor values
- Manual switching facility
- Test mode facility

Mechanical Specifications

Dimensions	144X144X80 mm (w × h × d)
Panel Cutout	138 mm x 138 mm

Electrical Specifications

Voltage Input	230 VAC ± 15%,or 415 VAC ± 15% 110 V (Optional) (H.T Model)
Current Input	--/5A --/1A (optional)
Frequency	50Hz
Low current	1% (50mA)
Accuracy	Class 1, Class 0.5, class 0.2 (optional)

© Systems and Controls (Sangli) Pvt. Ltd.

SYCON-66XX E3

Automatic power factor controller

Optional Features

HT CT Sensing for HT applications

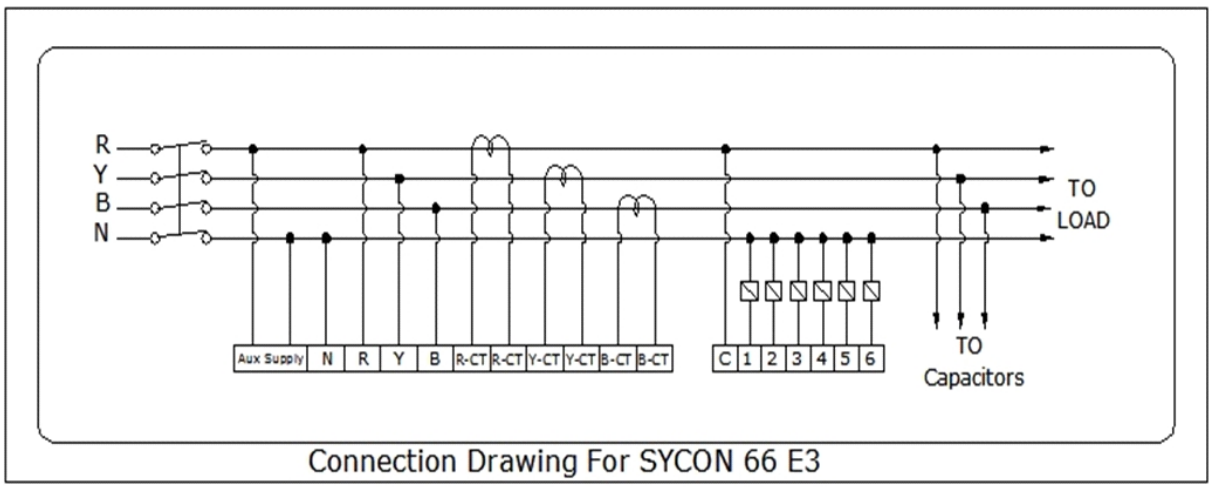

Connection Drawing For SYCON 66 E3

Address: C-24, MIDC, Miraj 416410 Dist. Sangli, Maharashtra, India

Phone: +91 9623 44 3835, +91 233 2644765 / 2644320

Email: info@sycon.co.in

Website: www.sycon.co.in

Customer Care: +91 9822 878 912

© Systems and Controls (Sangli) Pvt. Ltd.